Final Solution

## A gift created with love by family & friends, reminding great memories and encouraging every day - Gift Box.

[More about the final solution at the very bottom of the PDF].

Research

## So, who needs encouragement?

Old people, Students, Starting entrepreneurs, Parents, Solo mothers, Employees, Artists, People without a job, Homeless people, Athletes...

Hmmm, it looks like we could go on and on.

**"We all get discouraged. It's part of being human. When we're discouraged, it's hard to simply "decide to feel better." That's like running out of gas and hoping the tank fills itself. When it's empty, it's empty. We have to get fuel from somewhere else."**

[https://www.mikebechtle.com/so-who-needs-encouragement-anyway/]

## Everyone needs to be encouraged from time to time.

Existing Solutions

## How do people encourage each other in today's world?

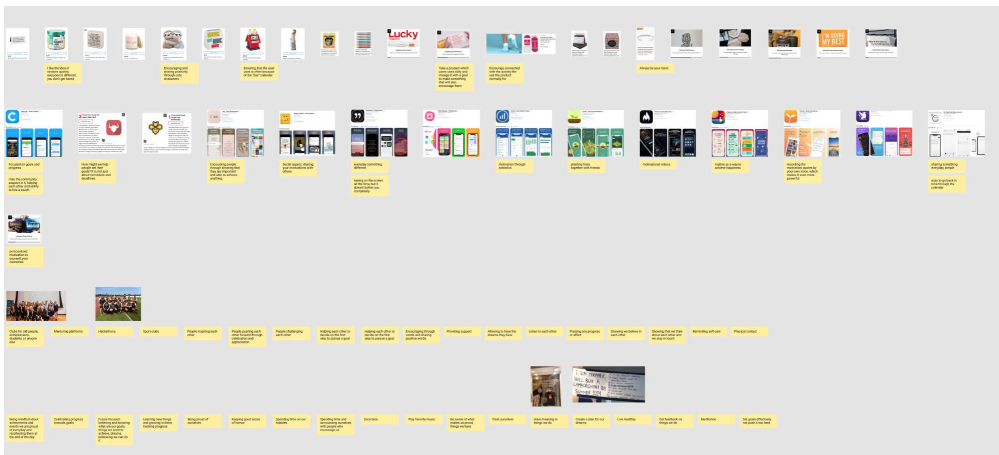

Mobile Apps (Habit trackers, Meditation, Journaling), Motivational Quotes, Gifts, Communities, Self-Encouragement Techniques, People around us.

**Could we streamline or improve any of these activities?**

**What might have the most significant impact on encouragement?**

**Are there any patterns between different categories?**

---

## Coming up with as many ideas as I could. Exploring different categories.

(Quotes, Habits, Goals, Communities - Physical products, Videos, Mobile Apps)

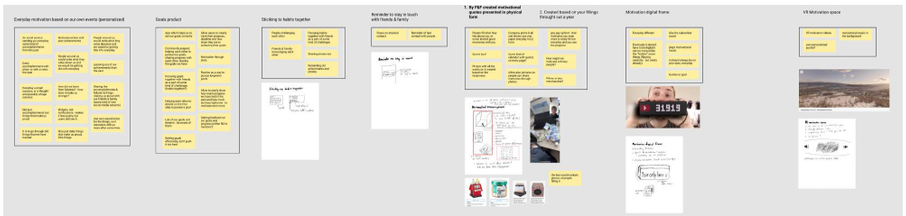

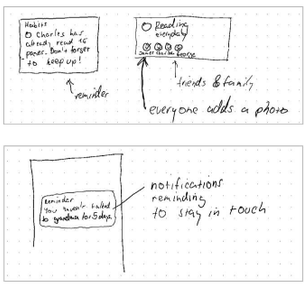


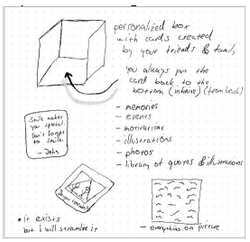


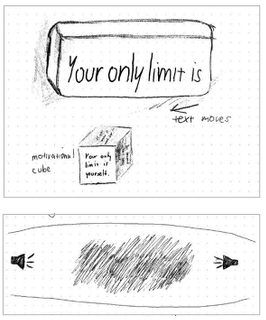


---

## Combination of website and physical product, focus on personalized encouragement by a close circle of friends.

I saw a huge potential in motivational quotes created by friends & family of a person who receives them.

This already exists nowadays. People write motivational thoughts to someone, for example, when they have a birthday. Yet, there is no streamlined product or service which streamlines it.

---

## A gift box containing personalized motivational and memories cards created by family & friends.

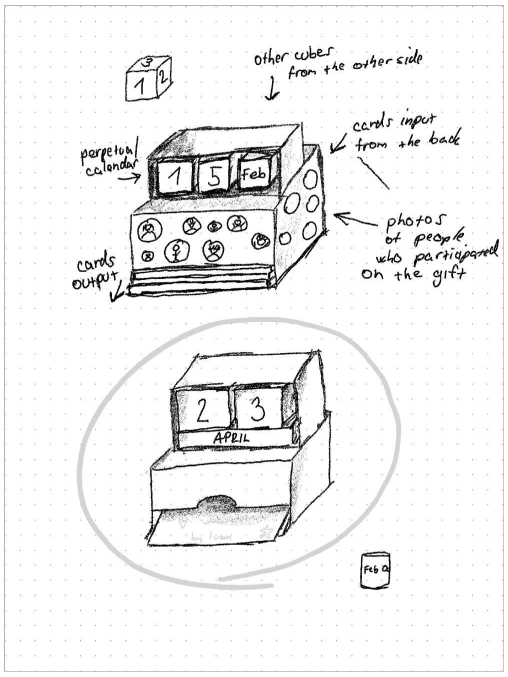


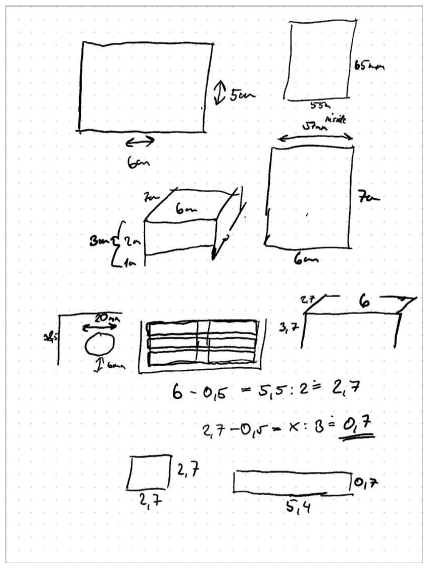


# Design

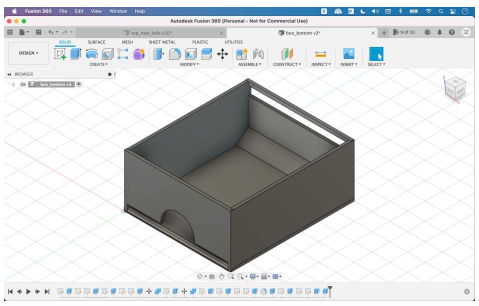

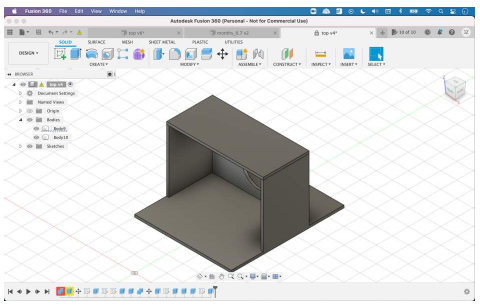

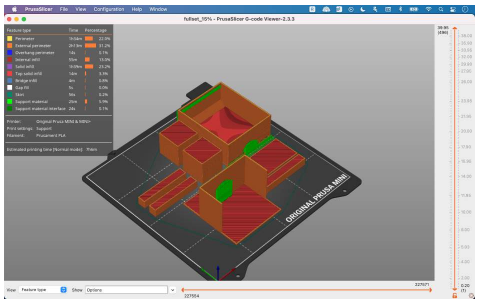

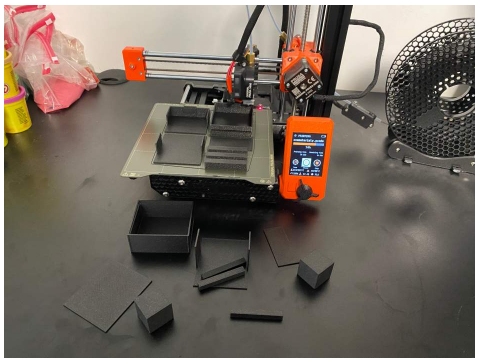

# Whole Experience

**The perfect gift created with love, reminding great memories and encouraging every day for infinite time.**

**1**

Initiator invites up to 50 people to participate in creating the gift for their common friend.

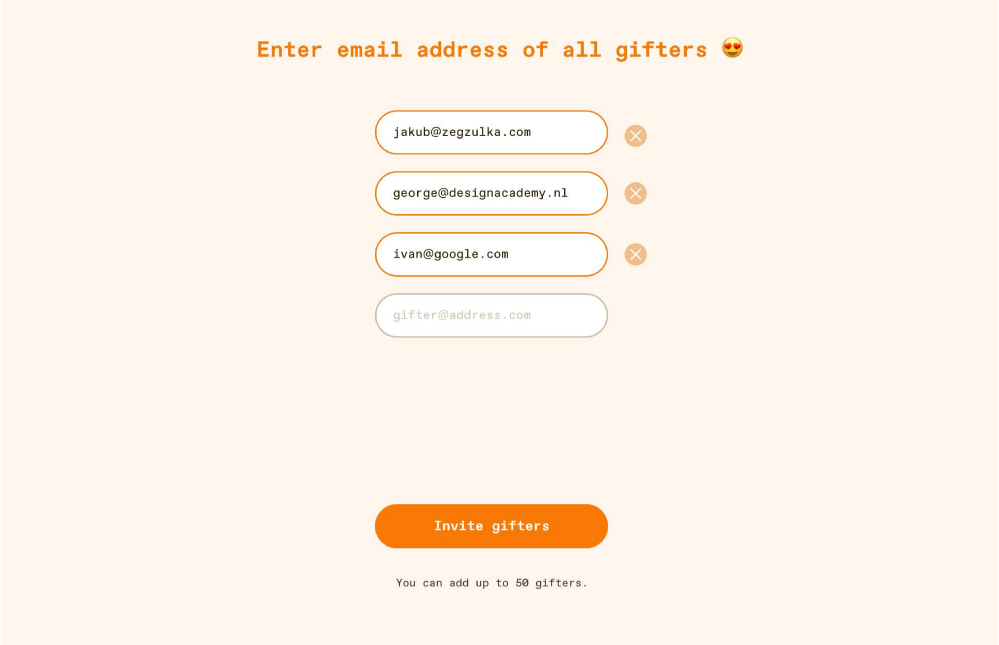


**2**

**All the people get an email invite that they can participate in creating the gift.**

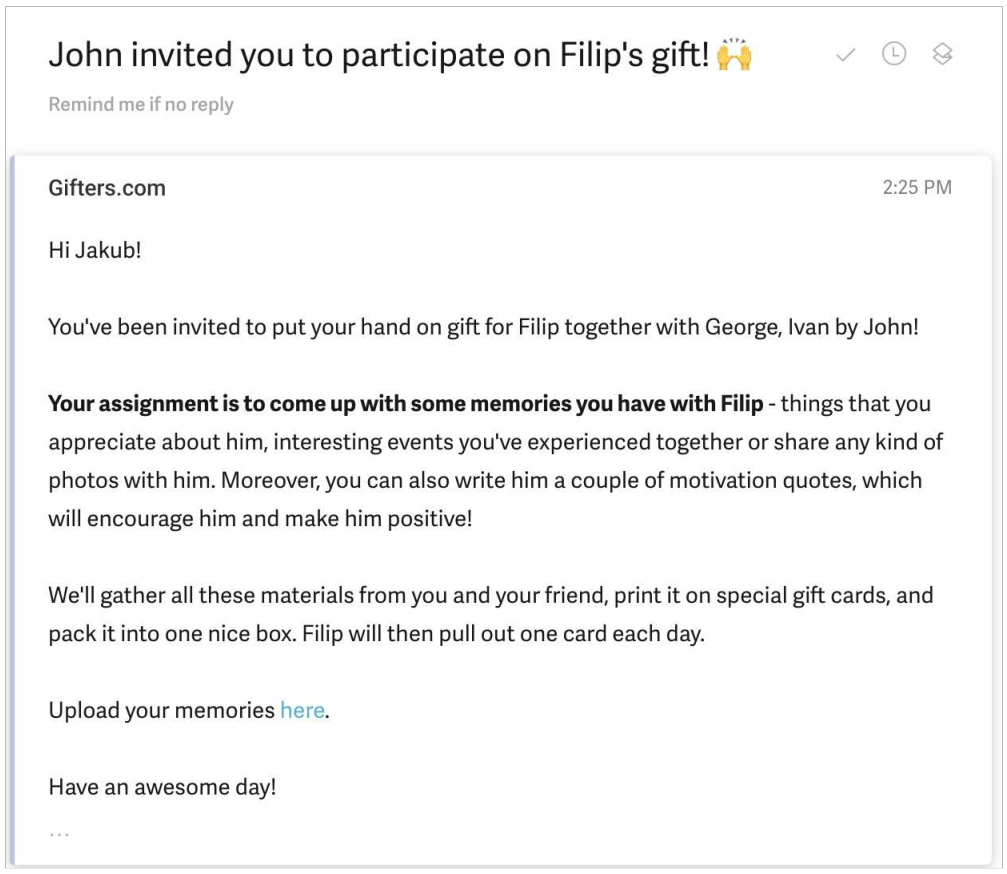

John invited you to participate on Filip's gift! 🙌

Remind me if no reply

Gifters.com 2:25 PM

Hi Jakub!

You've been invited to put your hand on gift for Filip together with George, Ivan by John!

**Your assignment is to come up with some memories you have with Filip** - things that you appreciate about him, interesting events you've experienced together or share any kind of photos with him. Moreover, you can also write him a couple of motivation quotes, which will encourage him and make him positive!

We'll gather all these materials from you and your friend, print it on special gift cards, and pack it into one nice box. Filip will then pull out one card each day.

Upload your memories here.

Have an awesome day!

...

**3**

**Everyone uploads their memories and thoughts for the recipient.**

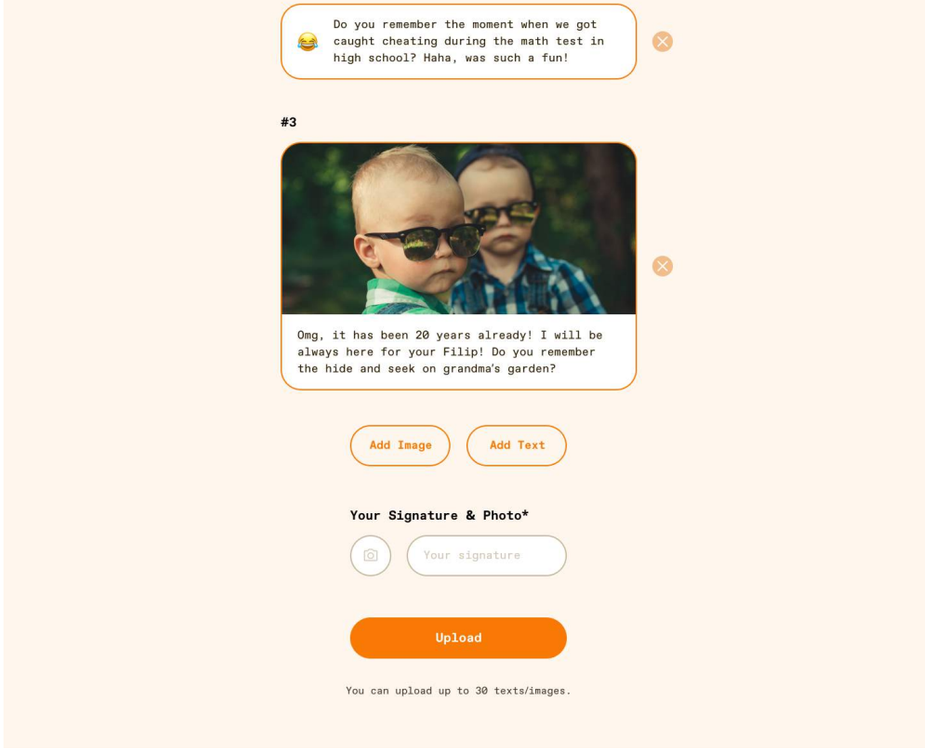


## 4

**Recipient receives the gift containing all the pictures and texts that the friends & family wrote to him/her.**

The perpetual calendar works as a reminder which pushes you to take one card every day. The most bottom card is pulled out a little bit, so you can easily take it. Afterwards, you can put the card back from the backside, so you never run out of cards.

The cards always contain the text or photo, together with the signature and photo of the person creating it.